POLYAMIDE CONNECTION CLICK

AECS/CLIC15

Description

One-piece self-closing polyamide clamp for SEC 20 sensor cables for indoor and outdoor use.
Tool-free locking mechanism.

Dimensions

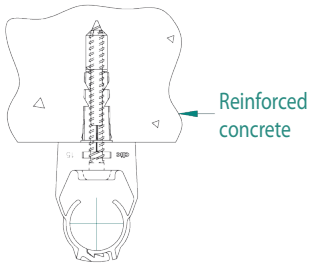

Cable clamp:

Typ	Material	Articulo-N°.
CLIC 15	Polymer blend	Z00304
CLIC TOP 15 negro	Polyamide PA 12	Z00395
CLIC TOP 15 dg	Polyamide PA 12	Z00401

MDP 25		M00325
► CLIC 15	Polymer blend	Z00304
► Peg Ø 6	Plastic	Z00301
► Screw 4,5x40	A4	Z00303

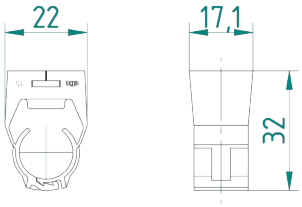

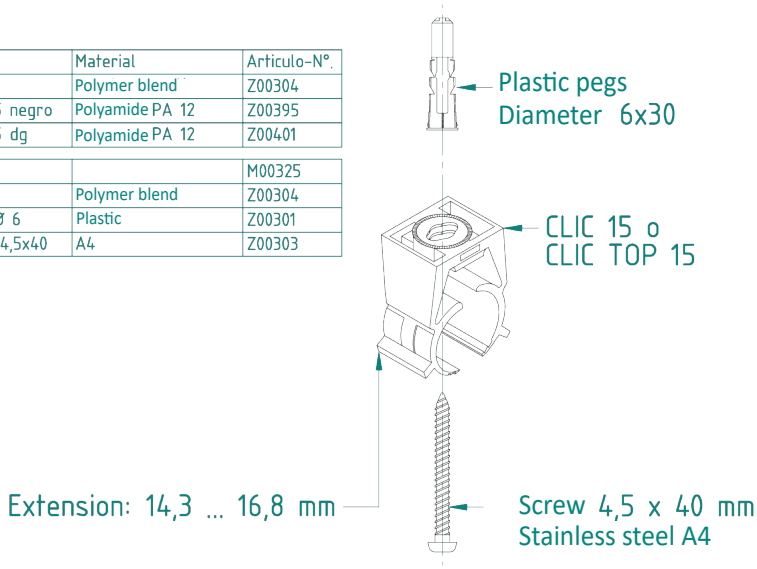

TECHNICAL CHARACTERISTICS	
Installation:	With metric fire protection pin or wood screw.
Halogen-free:	According to IEC 754-2, very high resistance to UV rays for outdoor use according to ISO 4892-2.
Approved:	According to KIWA and UL (1565/2043) Temperature range -30 .... +110 ° C.
Fixing diameter:	16.8 .... 19.5 mm.